DRAGON JACKET

INSULATION

PATENTED

GROOVED PIPING INSULATION SOLUTIONS

DIMENSIONAL REFERENCE GUIDE

DRAGON JACKET INSULATION
PATENTED

GROOVED PIPING INSULATION SOLUTIONS

THE CHALLENGE

Grooved piping systems enable fast installation, modularity, and serviceability by replacing welded joints with mechanical couplings. While mechanically efficient, the coupling geometry presents inherent challenges for insulation performance.

Insulated grooved piping systems commonly face:

- Moisture intrusion leading to R-value loss and risk of Corrosion Under Insulation (CUI)
- Heat loss, freeze risk, and condensation development
- Discontinuous geometry at couplings, fittings, and restraints
- Labor-intensive, multi-step insulation installations
- Ongoing maintenance requirements at access points

Conventional insulation systems are typically fabricated and sealed in the field using multiple materials. This increases labor and installation variability, elevates long-term moisture and performance risk, and often requires insulation removal and replacement to access couplings during maintenance.



DRAGON JACKET INSULATION PATENTED

THE DRAGON JACKET SOLUTION

Dragon Jacket Insulation provides a fully encapsulated, factory-fabricated insulation system engineered specifically for grooved piping system components manufactured by Victaulic, Gruvlok, Shurjoint, Anvil, and more.

Each assembly integrates a rigid, high-performance thermal insulation core with a seamless polyurea jacket, forming a single-piece, waterproof insulation solution. The system installs rapidly, eliminates field fabrication, and delivers reliable long-term performance over 20+ years of service life.

Key Performance Advantages:

- **Reliable Freeze Protection:** Maintains thermal continuity across straight runs, couplings, and fittings in cold climates
- **Fully Waterproof & Vapor-Sealed:** Eliminates moisture ingress and mitigates corrosion under insulation (CUI)
- **High Thermal Performance:** Consistent R-value maintained across straight pipe, fittings, and joints without compression or thinning
- **All-in-One Assembly:** Reduces field labor, installation time, and material handling compared to multi-component insulation systems
- **Component-Specific Coverage:** Purpose-designed for straight pipe, couplings, fittings, and restraints; no cutting, stuffing, or field fabrication
- **Removable & Reusable:** Supports routine inspection and maintenance without insulation destruction or replacement

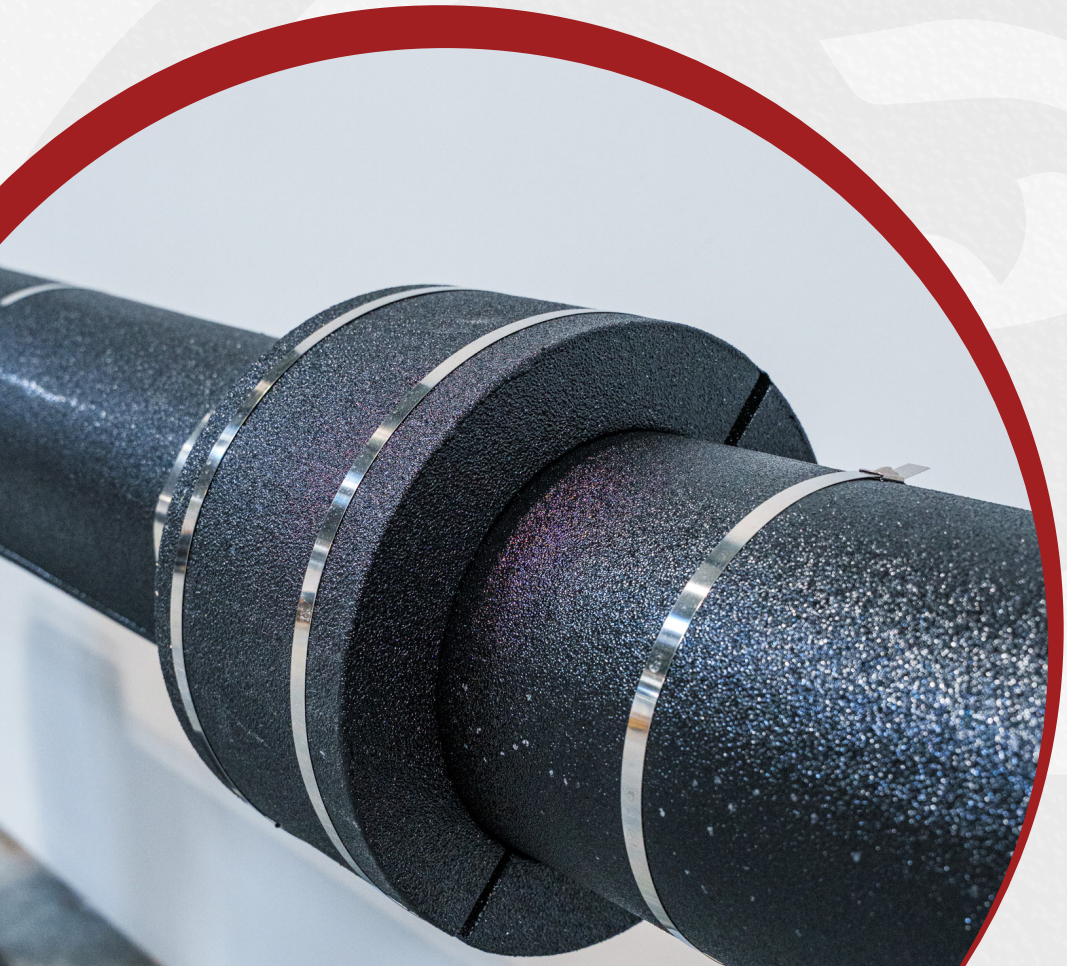

SYSTEM SNAPSHOT

Attribute	Specification
Pipe Standards	NPS/DN piping systems per ANSI, ASME, ISO standards
Available Sizes	2”–12” (DN50–DN300), additional sizes available
Insulation Core	Polyisocyanurate rigid foam (ASTM C591 Type IV)
Jacket Material	Polyurea Elastomer, factory applied
Thermal Performance	R-6.25 per inch (ASTM C518)
Operating Temperature	-40°F to 300°F (system dependent)
Installation	Factory fabricated, field-installed

SYSTEM DESCRIPTION

Dragon Jacket Insulation manufactures pre-engineered insulation assemblies for piping and mechanical components commonly used in grooved piping systems. These systems are designed to deliver long-term thermal performance, moisture resistance, and mechanical durability across a wide range of operating environments.

Covered components include, but are not limited to:

- Straight Pipe
- Coupling Connections
- 90° Elbows
- 45° Elbows
- Tees
- Flange Adapters
- Reducers
- Valves

Each insulation assembly consists of a rigid polyisocyanurate insulation core fully encapsulated in a seamless polyurea jacket. This construction provides a durable, waterproof protective barrier that helps maintain thermal efficiency while protecting piping components from moisture intrusion, physical damage, and environmental exposure.

STRAIGHT PIPE
INSULATION DIMENSIONAL REFERENCE

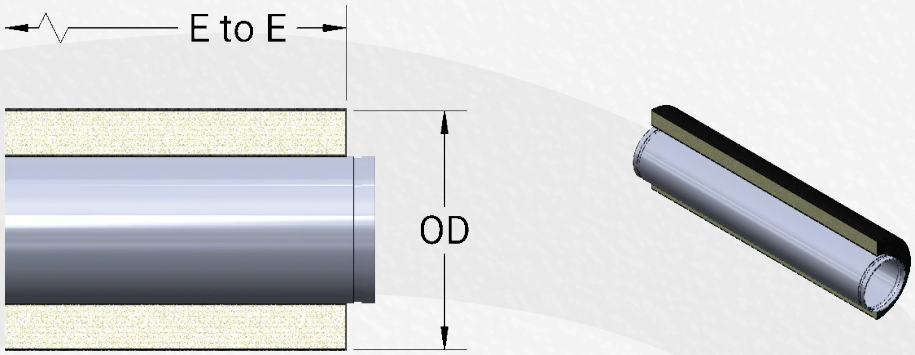

Material colors modified and exaggerated for clarity

Straight Pipe - Insulation Dimensional Reference

			1 Inch Wall		2 Inch Wall		3 Inch Wall	
Nominal (in)	DN (mm)	Pipe OD (in)	Insulation OD (in)	E to E (in)	Insulation OD (in)	E to E (in)	Insulation OD (in)	E to E (in)
1.5	40	1.9	4.25	36	6.25	36	8.25	36
2		2.375	4.625	36	6.625	36	8.625	36
2.5	60	2.875	5.125	36	7.125	36	9.125	36
3	80	3.5	5.75	36	7.75	36	9.75	36
4	100	4.5	6.75	36	8.75	36	10.75	36
6	150	6.625	8.875	36	10.875	36	12.875	36
8	200	8.625	10.875	36	12.875	36	14.875	36
10	250	10.75	13	36	15	36	17	36
12	300	12.75	15	36	17	36	19	36
14	350	14	16.25	36	18.25	36	20.25	36
16	400	16	18.25	36	20.25	36	22.25	36

• **E-to-E = End-to-End insulation length** • **C-to-E = Centerline-to-End insulation length** • **OD = Outside diameter of insulation**

• *Dimensional references shown are for Dragon Jacket Insulation assemblies designed to fit representative grooved piping components. Component names are used for geometric reference only.* • *Straight pipe insulation assemblies are supplied in standard 36 in nominal lengths unless otherwise specified.* • *Dimensions subject to normal manufacturing tolerances. Contact Dragon Jacket Insulation for critical clearance applications.*

Victaulic® is a registered trademark of Victaulic Company. Product names are used for reference only.

VICTAULIC® QUICKVIC™ NO. 107V RIGID COUPLING INSULATION DIMENSIONAL REFERENCE

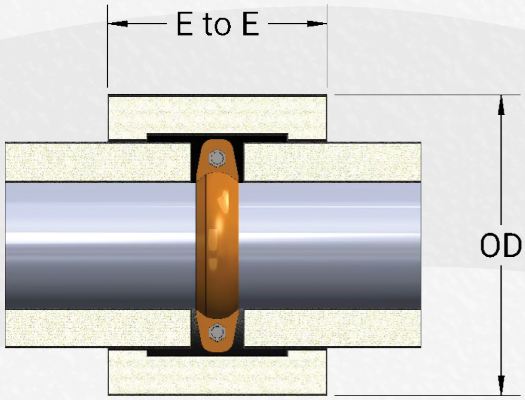

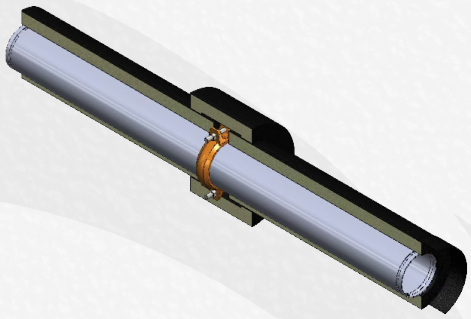

Material colors modified and exaggerated for clarity

QuickVic™ No. 107V Rigid Coupling - Insulation Dimensional Reference

			1 Inch Wall		2 Inch Wall		3 Inch Wall	
Nominal (in)	DN (mm)	Coupling OD (in)	Insulation OD (in)	E to E (in)	Insulation OD (in)	E to E (in)	Insulation OD (in)	E to E (in)
2	50	6.25	8.5	5.5	10.5	7.5	12.5	9.5
2.5		6.81	9.125	5.5	11.125	7.5	13.125	9.5
3	80	7.56	9.875	5.5	11.875	7.5	13.875	9.5
4	100	8.81	11.125	5.5	13.125	7.5	15.125	9.5
6	150	11.38	13.75	5.5	15.75	7.5	17.75	9.5
8	200	14.38	16.75	6	18.75	8	20.75	10
10	250	17.25	19.5	6	21.5	8	23.5	10
12	300	19.25	21.5	6	23.5	8	25.5	10

• **E-to-E = End-to-End insulation length** • **C-to-E = Centerline-to-End insulation length** • **OD = Outside diameter of insulation**

• *Dimensional references shown are for Dragon Jacket Insulation assemblies designed to fit representative grooved piping components. Component names are used for geometric reference only.* • *Straight pipe insulation assemblies are supplied in standard 36 in nominal lengths unless otherwise specified.* • *Dimensions subject to normal manufacturing tolerances. Contact Dragon Jacket Insulation for critical clearance applications.*

Victaulic® is a registered trademark of Victaulic Company. Product names are used for reference only.

VICTAULIC® NO. L100 90° LONG RADIUS ELBOW
INSULATION DIMENSIONAL REFERENCE

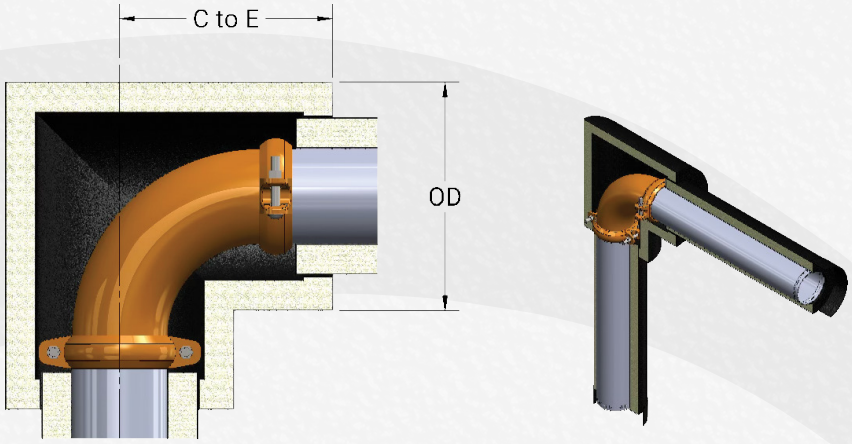

Material colors modified and exaggerated for clarity

Victaulic® No. L100 90° Long Radius Elbow - Insulation Dimensional Reference

			1 Inch Wall		2 Inch Wall		3 Inch Wall	
Nominal (in)	DN (mm)	Coupling OD (in)	Insulation OD (in)	C to E (in)	Insulation OD (in)	C to E (in)	Insulation OD (in)	C to E (in)
2	50	6.25	8.5	7.5	10.5	8.5	12.5	9.5
2.5		6.81	9.125	8.25	11.125	9.25	13.125	10.25
3	80	7.56	9.875	9	11.875	10	13.875	11
4	100	8.81	11.125	10.5	13.125	11.5	15.125	12.5
6	150	11.38	13.75	13.75	15.75	14.75	17.75	15.75
8	200	14.38	16.75	17.25	18.75	18.25	20.75	19.25
10	250	17.25	19.5	20.5	21.5	21.5	23.5	22.5
12	300	19.25	21.5	23.5	23.5	24.5	25.5	25.5

• **E-to-E = End-to-End insulation length** • **C-to-E = Centerline-to-End insulation length** • **OD = Outside diameter of insulation**

• *Dimensional references shown are for Dragon Jacket Insulation assemblies designed to fit representative grooved piping components. Component names are used for geometric reference only.* • *Straight pipe insulation assemblies are supplied in standard 36 in nominal lengths unless otherwise specified.* • *Dimensions subject to normal manufacturing tolerances. Contact Dragon Jacket Insulation for critical clearance applications.*

Victaulic® is a registered trademark of Victaulic Company. Product names are used for reference only.

VICTAULIC® NO. L10 90° SHORT RADIUS ELBOW
INSULATION DIMENSIONAL REFERENCE

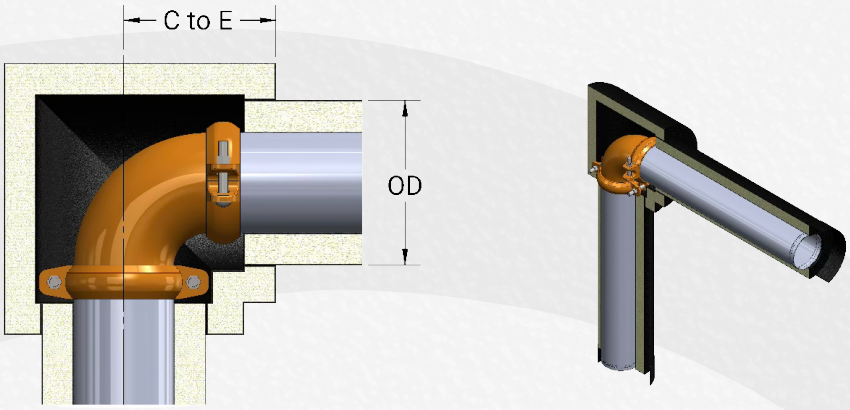

Material colors modified and exaggerated for clarity

Victaulic® No. L10 90° Short Radius Elbow - Insulation Dimensional Reference

			1 Inch Wall		2 Inch Wall		3 Inch Wall	
Nominal (in)	DN (mm)	Coupling OD (in)	Insulation OD (in)	C to E (in)	Insulation OD (in)	C to E (in)	Insulation OD (in)	C to E (in)
2	50	6.25	8.5	6.25	10.5	7.25	12.5	8.25
2.5		6.81	9.125	6.5	11.125	7.5	13.125	8.5
3	80	7.56	9.875	7	11.875	8	13.875	9
4	100	8.81	11.125	7.5	13.125	8.5	15.125	9.5
6	150	11.38	13.75	9	15.75	10	17.75	11
8	200	14.38	16.75	10.5	18.75	11.5	20.75	12.5
10	250	17.25	19.5	11.75	21.5	12.75	23.5	13.75
12	300	19.25	21.5	13	23.5	14	25.5	15

• **E-to-E = End-to-End insulation length** • **C-to-E = Centerline-to-End insulation length** • **OD = Outside diameter of insulation**

• *Dimensional references shown are for Dragon Jacket Insulation assemblies designed to fit representative grooved piping components. Component names are used for geometric reference only.* • *Straight pipe insulation assemblies are supplied in standard 36 in nominal lengths unless otherwise specified.* • *Dimensions subject to normal manufacturing tolerances. Contact Dragon Jacket Insulation for critical clearance applications.*

Victaulic® is a registered trademark of Victaulic Company. Product names are used for reference only.

DRAGON JACKET INSULATION PATENTED

GROOVED PIPING INSULATION SOLUTIONS

VICTAULIC® NO. L110 45° LONG RADIUS ELBOW
INSULATION DIMENSIONAL REFERENCE

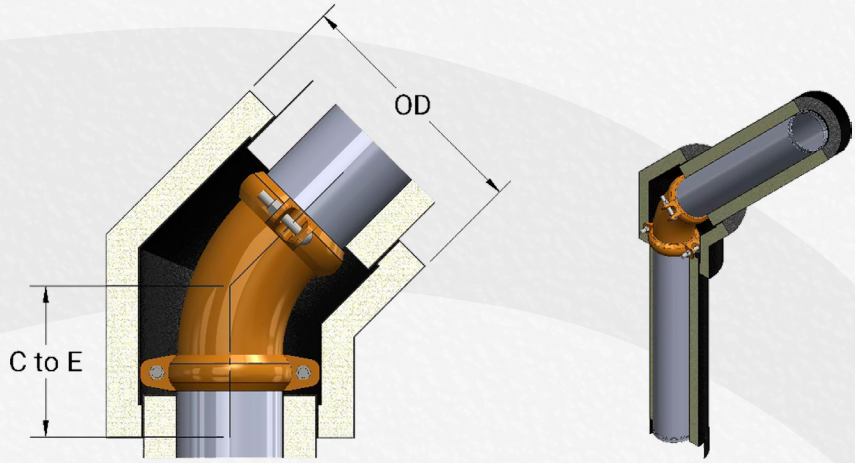

Material colors modified and exaggerated for clarity

Victaulic® No. L110 45° Long Radius Elbow - Insulation Dimensional Reference

			1 Inch Wall		2 Inch Wall		3 Inch Wall	
Nominal (in)	DN (mm)	Coupling OD (in)	Insulation OD (in)	C to E (in)	Insulation OD (in)	C to E (in)	Insulation OD (in)	C to E (in)
2	50	6.25	8.5	5.75	10.5	6.75	12.5	7.75
2.5		6.81	9.125	6	11.125	7	13.125	8
3	80	7.56	9.875	6.38	11.875	7.38	13.875	8.38
4	100	8.81	11.125	7	13.125	8	15.125	9
6	150	11.38	13.75	8.5	15.75	9.5	17.75	10.5
8	200	14.38	16.75	10.25	18.75	11.25	20.75	12.25
10	250	17.25	19.5	11.5	21.5	12.5	23.5	13.5
12	300	19.25	21.5	13	23.5	14	25.5	15

• E-to-E = End-to-End insulation length • C-to-E = Centerline-to-End insulation length • OD = Outside diameter of insulation

• Dimensional references shown are for Dragon Jacket Insulation assemblies designed to fit representative grooved piping components. Component names are used for geometric reference only. • Straight pipe insulation assemblies are supplied in standard 36 in nominal lengths unless otherwise specified. • Dimensions subject to normal manufacturing tolerances. Contact Dragon Jacket Insulation for critical clearance applications.

Victaulic® is a registered trademark of Victaulic Company. Product names are used for reference only.

dragonjacket.com info@dragonjacket.com (208) 772-8640

VICTAULIC® NO. L11 45° SHORT RADIUS ELBOW
INSULATION DIMENSIONAL REFERENCE

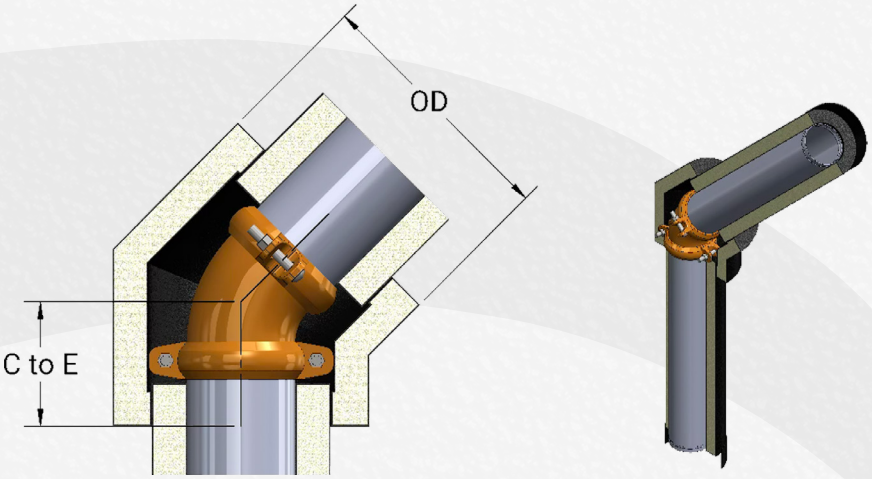

Material colors modified and exaggerated for clarity

Victaulic® No. L11 45° Short Radius Elbow - Insulation Dimensional Reference

			1 Inch Wall		2 Inch Wall		3 Inch Wall	
Nominal (in)	DN (mm)	Coupling OD (in)	Insulation OD (in)	C to E (in)	Insulation OD (in)	C to E (in)	Insulation OD (in)	C to E (in)
2	50	6.25	8.5	5	10.5	6	12.5	7
2.5		6.81	9.125	5.25	11.125	6.25	13.125	7.25
3	80	7.56	9.875	5.5	11.875	6.5	13.875	7.5
4	100	8.81	11.125	6	13.125	7	15.125	8
6	150	11.38	13.75	6.5	15.75	7.5	17.75	8.5
8	200	14.38	16.75	7.25	18.75	8.25	20.75	9.25
10	250	17.25	19.5	7	21.5	8	23.5	9
12	300	19.25	21.5	7.5	23.5	8.5	25.5	9.5

• E-to-E = End-to-End insulation length • C-to-E = Centerline-to-End insulation length • OD = Outside diameter of insulation

• Dimensional references shown are for Dragon Jacket Insulation assemblies designed to fit representative grooved piping components. Component names are used for geometric reference only. • Straight pipe insulation assemblies are supplied in standard 36 in nominal lengths unless otherwise specified. • Dimensions subject to normal manufacturing tolerances. Contact Dragon Jacket Insulation for critical clearance applications.

Victaulic® is a registered trademark of Victaulic Company. Product names are used for reference only.

VICTAULIC® NO. 20 TEE
INSULATION DIMENSIONAL REFERENCE

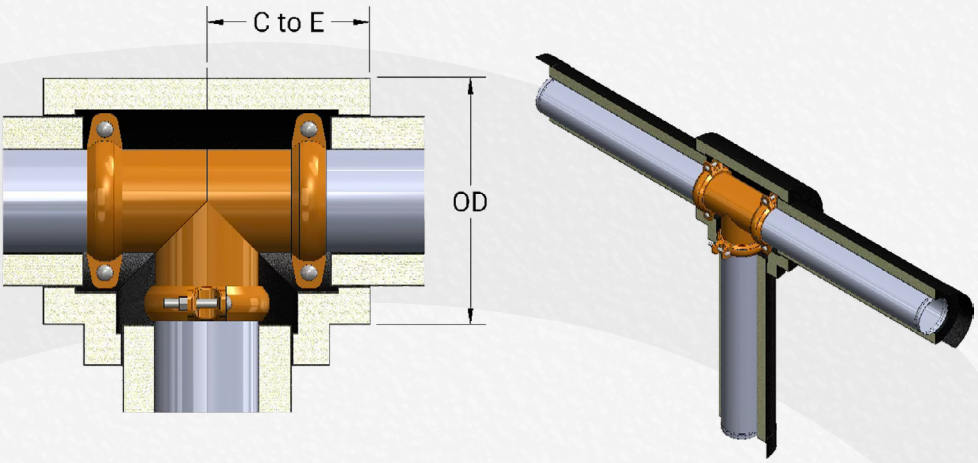

Material colors modified and exaggerated for clarity

Victaulic® No. 20 Tee - Insulation Dimensional Reference

			1 Inch Wall		2 Inch Wall		3 Inch Wall	
Nominal (in)	DN (mm)	Coupling OD (in)	Insulation OD (in)	C to E (in)	Insulation OD (in)	C to E (in)	Insulation OD (in)	C to E (in)
2	50	6.25	8.5	6.25	10.5	7.25	12.5	8.25
2.5		6.81	9.125	6.75	11.125	7.75	13.125	8.75
3	80	7.56	9.875	7.25	11.875	8.25	13.875	9.25
4	100	8.81	11.125	8	13.125	9	15.125	10
6	150	11.38	13.75	9.5	15.75	10.5	17.75	11.5
8	200	14.38	16.75	10.75	18.75	11.75	20.75	12.75
10	250	17.25	19.5	13.75	21.5	14.75	23.5	15.75
12	300	19.25	21.5	15.5	23.5	16.5	25.5	17.5

• **E-to-E = End-to-End insulation length** • **C-to-E = Centerline-to-End insulation length** • **OD = Outside diameter of insulation**

• *Dimensional references shown are for Dragon Jacket Insulation assemblies designed to fit representative grooved piping components. Component names are used for geometric reference only.* • *Straight pipe insulation assemblies are supplied in standard 36 in nominal lengths unless otherwise specified.* • *Dimensions subject to normal manufacturing tolerances. Contact Dragon Jacket Insulation for critical clearance applications.*

Victaulic® is a registered trademark of Victaulic Company. Product names are used for reference only.

VICTAULIC® NO. V20 TEE
INSULATION DIMENSIONAL REFERENCE

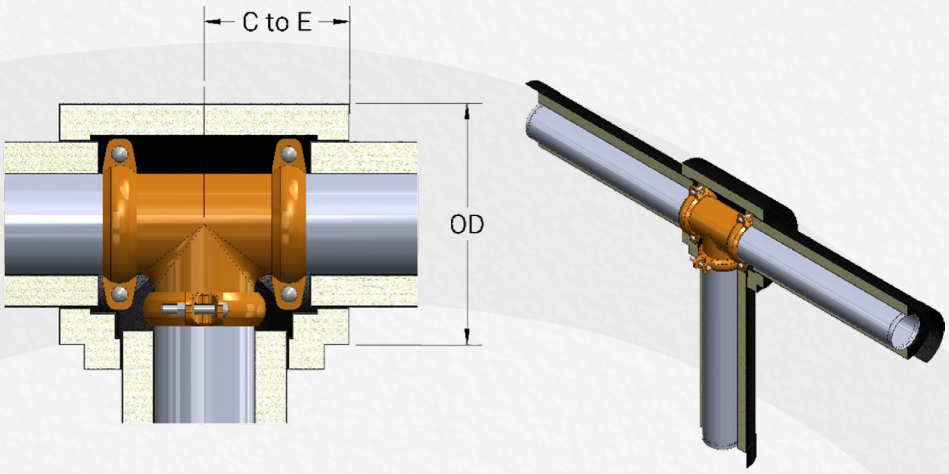

Material colors modified and exaggerated for clarity

Victaulic® No. V20 Tee - Insulation Dimensional Reference

Nominal (in)	DN (mm)	Coupling OD (in)	Insulation OD (in)	C to E (in)	Insulation OD (in)	C to E (in)	Insulation OD (in)	C to E (in)
2	50	6.25	8.5	5.75	10.5	6.75	12.5	7.75
2.5		6.81	9.125	6	11.125	7	13.125	8
3	80	7.56	9.875	6.5	11.875	7.5	13.875	8.5
4	100	8.81	11.125	7	13.125	8	15.125	9
6	150	11.38	13.75	8.5	15.75	9.5	17.75	10.5
8	200	14.38	16.75	10	18.75	11	20.75	12
10	250	17.25	19.5	11.25	21.5	12.25	23.5	13.25
12	300	19.25	21.5	12.5	23.5	13.5	25.5	14.5

• **E-to-E = End-to-End insulation length** • **C-to-E = Centerline-to-End insulation length** • **OD = Outside diameter of insulation**

• *Dimensional references shown are for Dragon Jacket Insulation assemblies designed to fit representative grooved piping components. Component names are used for geometric reference only.* • *Straight pipe insulation assemblies are supplied in standard 36 in nominal lengths unless otherwise specified.* • *Dimensions subject to normal manufacturing tolerances. Contact Dragon Jacket Insulation for critical clearance applications.*

Victaulic® is a registered trademark of Victaulic Company. Product names are used for reference only.

VICTAULIC® NO. V25 REDUCING TEE
INSULATION DIMENSIONAL REFERENCE

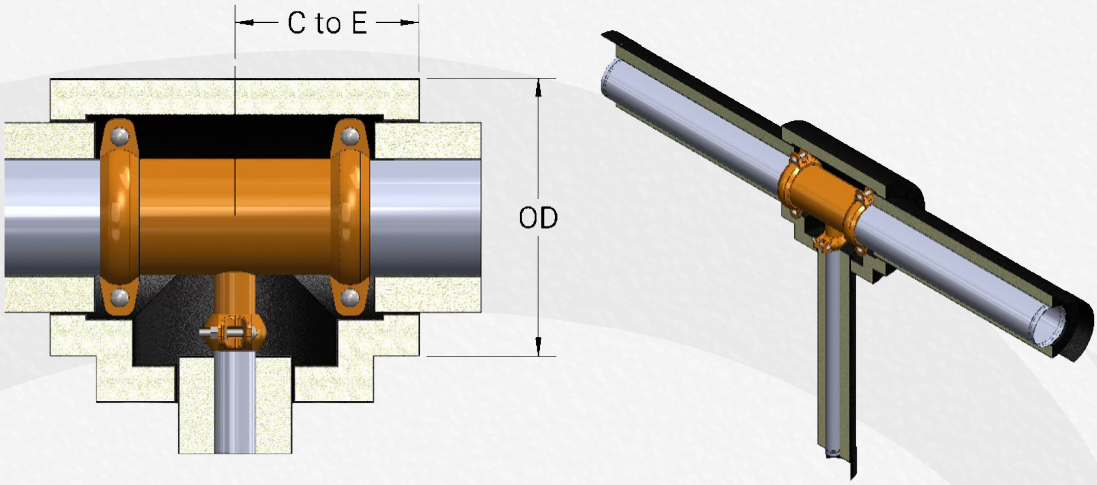

Material colors modified and exaggerated for clarity

Victaulic® No. V25 Reducing Tee - Insulation Dimensional Reference

			1 Inch Wall		2 Inch Wall		3 Inch Wall	
Nominal (in)	DN (mm)	Coupling OD (in)	Insulation OD (in)	C to E (in)	Insulation OD (in)	C to E (in)	Insulation OD (in)	C to E (in)
2 x 1.5	50	6.25	8.5	6.25	10.5	7.25	12.5	8.25
3 x 1.5	80	7.56	9.875	7.25	11.875	8.25	13.875	9.25
3 x 2	80	7.56	9.875	7.25	11.875	8.25	13.875	9.25
4 x 1.5	100	8.81	11.125	8	13.125	9	15.125	10
4 x 2	100	8.81	11.125	8	13.125	9	15.125	10
4 x 2.5	100	8.81	11.125	8	13.125	9	15.125	10
4 x 3	100	8.81	11.125	8	13.125	9	15.125	10
6 x 2	150	11.38	13.75	9.5	15.75	10.5	17.75	11.5
6 x 3	150	11.38	13.75	9.5	15.75	10.5	17.75	11.5
6 x 4	150	11.38	13.75	9.5	15.75	10.5	17.75	11.5
8 x 2	200	14.38	16.75	10.75	18.75	11.75	20.75	12.75
8 x 2.5	200	14.38	16.75	10.75	18.75	11.75	20.75	12.75

Victaulic® No. V25 Reducing Tee - Insulation Dimensional Reference

			1 Inch Wall		2 Inch Wall		3 Inch Wall	
Nominal (in)	DN (mm)	Coupling OD (in)	Insulation OD (in)	C to E (in)	Insulation OD (in)	C to E (in)	Insulation OD (in)	C to E (in)
8 x 3	200	14.38	16.75	10.75	18.75	11.75	20.75	12.75
8 x 4	200	14.38	16.75	10.75	18.75	11.75	20.75	12.75
8 x 6	200	14.38	16.75	10.75	18.75	11.75	20.75	12.75
10 x 6	250	17.25	19.5	12	21.5	13	23.5	14
10 x 8	250	17.25	19.5	12	21.5	13	23.5	14
12 x 8	300	19.25	21.5	15.5	23.5	16.5	25.5	17.5
12 x 10	300	19.25	21.5	15.5	23.5	16.5	25.5	17.5

• E-to-E = End-to-End insulation length • C-to-E = Centerline-to-End insulation length • OD = Outside diameter of insulation

• Dimensional references shown are for Dragon Jacket Insulation assemblies designed to fit representative grooved piping components. Component names are used for geometric reference only. • Straight pipe insulation assemblies are supplied in standard 36 in nominal lengths unless otherwise specified. • Dimensions subject to normal manufacturing tolerances. Contact Dragon Jacket Insulation for critical clearance applications.

Victaulic® is a registered trademark of Victaulic Company. Product names are used for reference only.

VICTAULIC® NO. 45R FLANGE ADAPTER
INSULATION DIMENSIONAL REFERENCE

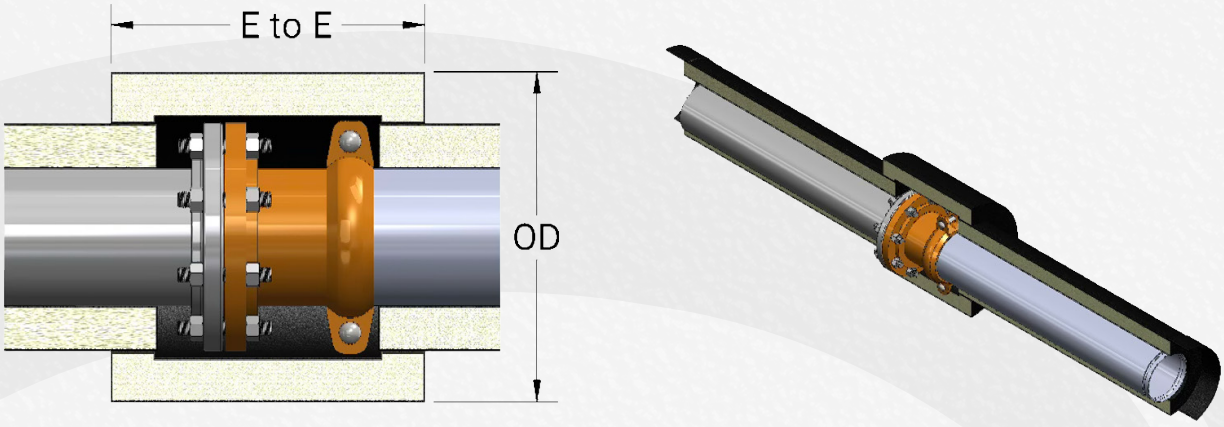

Material colors modified and exaggerated for clarity

Victaulic® No. 45R Flange Adapter - Insulation Dimensional Reference

			1 Inch Wall		2 Inch Wall		3 Inch Wall	
Nominal (in)	DN (mm)	Coupling OD (in)	Insulation OD (in)	E to E (in)	Insulation OD (in)	E to E (in)	Insulation OD (in)	E to E (in)
2	50	6.250	8.5	7	10.5	9	12.5	11
2.5		6.81	9.125	7	11.125	9	13.125	11
3	80	7.56	9.875	7	11.875	9	13.875	11
4	100	8.81	11.125	9	13.125	11	15.125	13
6	150	11.38	13.75	9	15.75	11	17.75	13
8	200	14.38	16.75	9	18.75	11	20.75	13
10	250	17.25	19.5	11	21.5	13	23.5	15
12	300	19.25	21.5	11	23.5	13	25.5	15

• **E-to-E = End-to-End insulation length** • **C-to-E = Centerline-to-End insulation length** • **OD = Outside diameter of insulation**

• *Dimensional references shown are for Dragon Jacket Insulation assemblies designed to fit representative grooved piping components. Component names are used for geometric reference only.* • *Straight pipe insulation assemblies are supplied in standard 36 in nominal lengths unless otherwise specified.* • *Dimensions subject to normal manufacturing tolerances. Contact Dragon Jacket Insulation for critical clearance applications.*

Victaulic® is a registered trademark of Victaulic Company. Product names are used for reference only.

VICTAULIC® NO. 46R FLANGE ADAPTER
INSULATION DIMENSIONAL REFERENCE

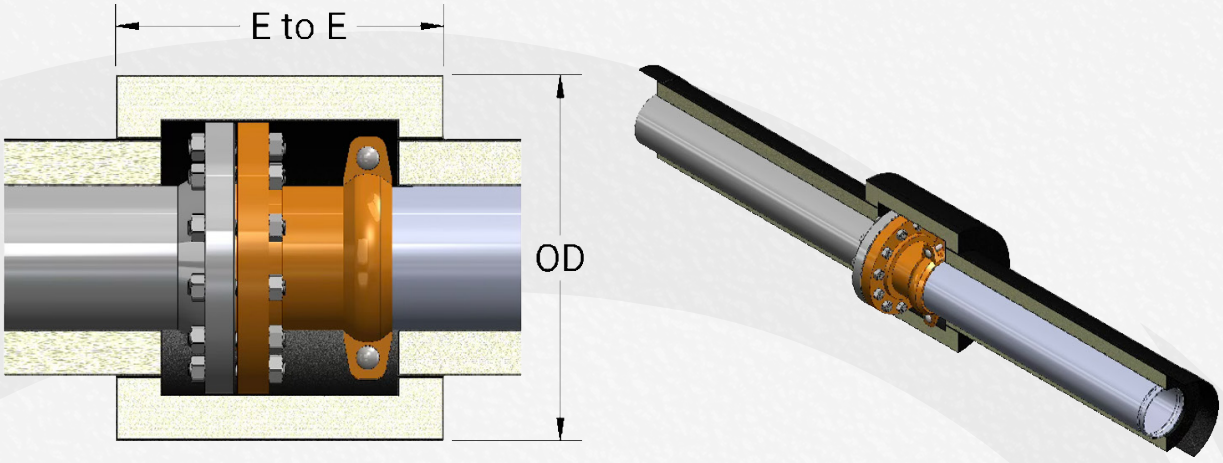

Material colors modified and exaggerated for clarity

Victaulic® No. 46R Flange Adapter - Insulation Dimensional Reference

			1 Inch Wall		2 Inch Wall		3 Inch Wall	
Nominal (in)	DN (mm)	Coupling OD (in)	Insulation OD (in)	E to E (in)	Insulation OD (in)	E to E (in)	Insulation OD (in)	E to E (in)
2	50	6.5	8.75	7	10.75	9	12.75	11
2.5		7.5	9.75	7	11.75	9	13.75	11
3	80	8.25	10.5	7	12.5	9	14.5	11
4	100	10	12.25	9	14.25	11	16.25	13
6	150	12.5	14.75	9	16.75	11	18.75	13
8	200	15	17.25	9	19.25	11	21.25	13
10	250	17.5	19.75	11	21.75	13	23.75	15
12	300	20.5	22.75	11	24.75	13	26.75	15

• **E-to-E = End-to-End insulation length** • **C-to-E = Centerline-to-End insulation length** • **OD = Outside diameter of insulation**

• *Dimensional references shown are for Dragon Jacket Insulation assemblies designed to fit representative grooved piping components. Component names are used for geometric reference only.* • *Straight pipe insulation assemblies are supplied in standard 36 in nominal lengths unless otherwise specified.* • *Dimensions subject to normal manufacturing tolerances. Contact Dragon Jacket Insulation for critical clearance applications.*

Victaulic® is a registered trademark of Victaulic Company. Product names are used for reference only.

VICTAULIC® NO. 50 CONCENTRIC REDUCER
INSULATION DIMENSIONAL REFERENCE

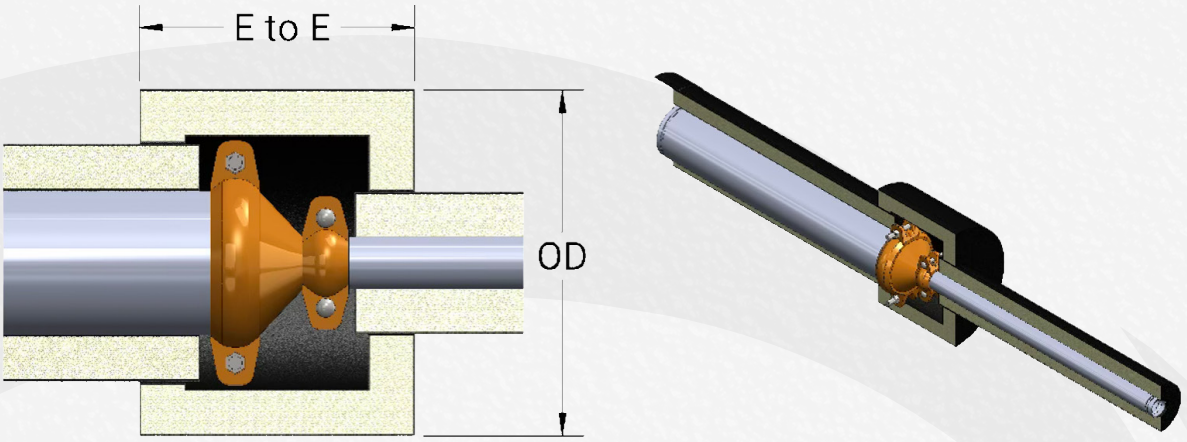

Material colors modified and exaggerated for clarity

Victaulic® No. 50 Concentric Reducer - Insulation Dimensional Reference

			1 Inch Wall		2 Inch Wall		3 Inch Wall	
Nominal (in)	DN (mm)	Coupling OD (in)	Insulation OD (in)	E to E (in)	Insulation OD (in)	E to E (in)	Insulation OD (in)	E to E (in)
2 x 1.5	50	6.25	8.5	6	10.5	8	12.5	10
3 x 1.5	80	7.56	9.875	6.5	11.875	8.5	13.875	10.5
3 x 2	80	7.56	9.875	6.5	11.875	8.5	13.875	10.5
4 x 1.5	100	8.81	11.125	7	13.125	9	15.125	11
4 x 2	100	8.81	11.125	7	13.125	9	15.125	11
4 x 2.5	100	8.81	11.125	7	13.125	9	15.125	11
4 x 3	100	8.81	11.125	7	13.125	9	15.125	11
6 x 2	150	11.38	13.75	8.5	15.75	10.5	17.75	12.5
6 x 3	150	11.38	13.75	8.5	15.75	10.5	17.75	12.5
6 x 4	150	11.38	13.75	8.5	15.75	10.5	17.75	12.5
8 x 4	200	14.38	16.75	9	18.75	11	20.75	13
8 x 6	200	14.38	16.75	9	18.75	11	20.75	13

Victaulic® No. 50 Concentric Reducer - Insulation Dimensional Reference

			1 Inch Wall		2 Inch Wall		3 Inch Wall	
Nominal (in)	DN (mm)	Coupling OD (in)	Insulation OD (in)	E to E (in)	Insulation OD (in)	E to E (in)	Insulation OD (in)	E to E (in)
10 x 4	250	17.25	19.5	10	21.5	12	23.5	14
10 x 6	250	17.25	19.5	10	21.5	12	23.5	14
10 x 8	250	17.25	19.5	10	21.5	12	23.5	14
12 x 8	300	19.25	21.5	11	23.5	13	25.5	15
12 x 10	300	19.25	21.5	11	23.5	13	25.5	15

• E-to-E = End-to-End insulation length • C-to-E = Centerline-to-End insulation length • OD = Outside diameter of insulation

• Dimensional references shown are for Dragon Jacket Insulation assemblies designed to fit representative grooved piping components. Component names are used for geometric reference only. • Straight pipe insulation assemblies are supplied in standard 36 in nominal lengths unless otherwise specified. • Dimensions subject to normal manufacturing tolerances. Contact Dragon Jacket Insulation for critical clearance applications.

Victaulic® is a registered trademark of Victaulic Company. Product names are used for reference only.

VICTAULIC® NO. 51 ECCENTRIC REDUCER
INSULATION DIMENSIONAL REFERENCE

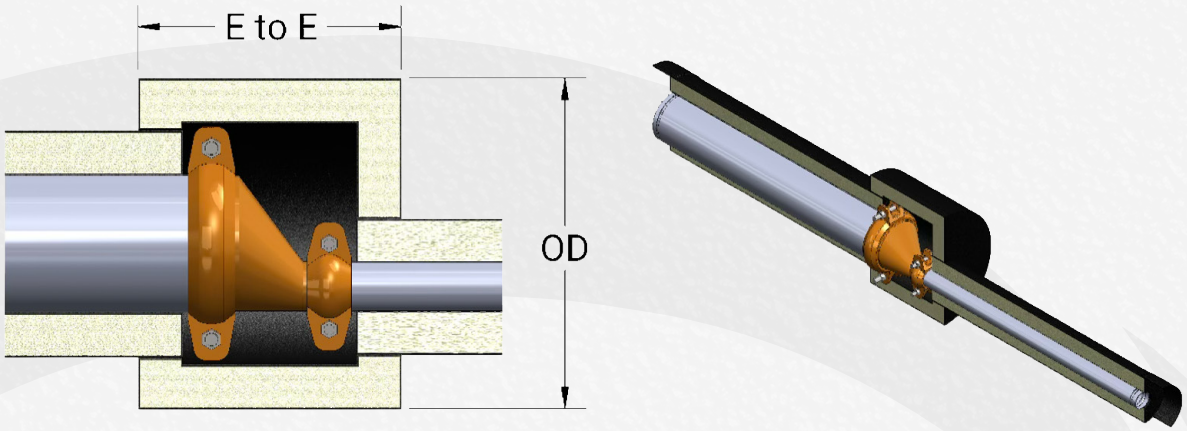

Material colors modified and exaggerated for clarity

Victaulic® No. 51 Eccentric Reducer - Insulation Dimensional Reference

			1 Inch Wall		2 Inch Wall		3 Inch Wall	
Nominal (in)	DN (mm)	Coupling OD (in)	Insulation OD (in)	E to E (in)	Insulation OD (in)	E to E (in)	Insulation OD (in)	E to E (in)
2 x 1.5	50	6.25	8.5	6	10.5	8	12.5	10
3 x 1.5	80	7.56	9.875	6.5	11.875	8.5	13.875	10.5
3 x 2	80	7.56	9.875	6.5	11.875	8.5	13.875	10.5
4 x 1.5	100	8.81	11.125	7	13.125	9	15.125	11
4 x 2	100	8.81	11.125	7	13.125	9	15.125	11
4 x 3	100	8.81	11.125	7	13.125	9	15.125	11
6 x 2	150	11.38	13.75	8.5	15.75	10.5	17.75	12.5
6 x 3	150	11.38	13.75	8.5	15.75	10.5	17.75	12.5
6 x 4	150	11.38	13.75	8.5	15.75	10.5	17.75	12.5
8 x 4	200	14.38	16.75	9	18.75	11	20.75	13
8 x 6	200	14.38	16.75	9	18.75	11	20.75	13

Victaulic® No. 51 Eccentric Reducer - Insulation Dimensional Reference

			1 Inch Wall		2 Inch Wall		3 Inch Wall	
Nominal (in)	DN (mm)	Coupling OD (in)	Insulation OD (in)	E to E (in)	Insulation OD (in)	E to E (in)	Insulation OD (in)	E to E (in)
10 x 6	250	17.25	19.5	10	21.5	12	23.5	14
10 x 8	250	17.25	19.5	10	21.5	12	23.5	14
12 x 8	300	19.25	21.5	11	23.5	13	25.5	15
12 x 10	300	19.25	21.5	11	23.5	13	25.5	15

• **E-to-E = End-to-End insulation length** • **C-to-E = Centerline-to-End insulation length** • **OD = Outside diameter of insulation**

• *Dimensional references shown are for Dragon Jacket Insulation assemblies designed to fit representative grooved piping components. Component names are used for geometric reference only.* • *Straight pipe insulation assemblies are supplied in standard 36 in nominal lengths unless otherwise specified.* • *Dimensions subject to normal manufacturing tolerances. Contact Dragon Jacket Insulation for critical clearance applications.*

Victaulic® is a registered trademark of Victaulic Company. Product names are used for reference only.

VICTAULIC® NO. 700 BUTTERFLY VALVE
INSULATION DIMENSIONAL REFERENCE

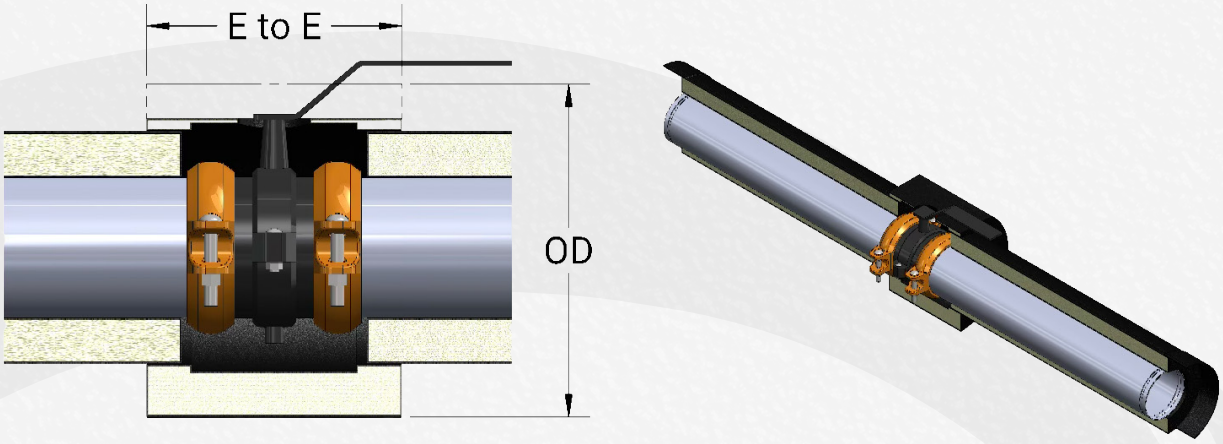

Material colors modified and exaggerated for clarity

Victaulic® No. 700 Butterfly Valve - Insulation Dimensional Reference

			1 Inch Wall		2 Inch Wall		3 Inch Wall	
Nominal (in)	DN (mm)	Coupling OD (in)	Insulation OD (in)	E to E (in)	Insulation OD (in)	E to E (in)	Insulation OD (in)	E to E (in)
2	50	6.25	8.5	7.25	10.5	9.25	12.5	11.25
2.5		6.81	9.125	8	11.125	10	13.125	12
3	80	7.56	9.875	8	11.875	10	13.875	12
4	100	8.81	11.125	8.75	13.125	10.75	15.125	12.75
6	150	11.38	13.75	10	15.75	12	17.75	14

• **E-to-E = End-to-End insulation length** • **C-to-E = Centerline-to-End insulation length** • **OD = Outside diameter of insulation**

• *Dimensional references shown are for Dragon Jacket Insulation assemblies designed to fit representative grooved piping components. Component names are used for geometric reference only.* • *Straight pipe insulation assemblies are supplied in standard 36 in nominal lengths unless otherwise specified.* • *Dimensions subject to normal manufacturing tolerances. Contact Dragon Jacket Insulation for critical clearance applications.*

Victaulic® is a registered trademark of Victaulic Company. Product names are used for reference only.

VICTAULIC® NO. 761 BUTTERFLY VALVE

INSULATION DIMENSIONAL REFERENCE

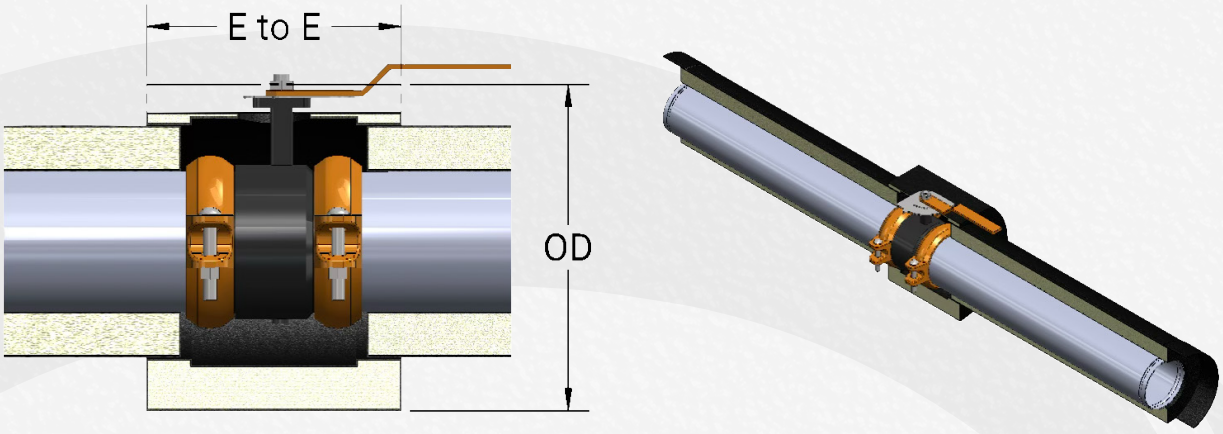

Material colors modified and exaggerated for clarity

Victaulic® No. 761 Butterfly Valve - Insulation Dimensional Reference

			1 Inch Wall		2 Inch Wall		3 Inch Wall	
Nominal (in)	DN (mm)	Coupling OD (in)	Insulation OD (in)	E to E (in)	Insulation OD (in)	E to E (in)	Insulation OD (in)	E to E (in)
2	50	6.25	8.5	7.25	10.5	9.25	12.5	11.25
2.5		6.81	9.125	8	11.125	10	13.125	12
3	80	7.56	9.875	8	11.875	10	13.875	12
4	100	8.81	11.125	8.75	13.125	10.75	15.125	12.75
6	150	11.38	13.75	10	15.75	12	17.75	14
8	200	14.38	16.75	9.5	18.75	11.5	20.75	13.5
10	250	17.25	19.5	10.5	21.5	12.5	23.5	14.5
12	300	19.25	21.5	10.5	23.5	12.5	25.5	14.5

• **E-to-E = End-to-End insulation length** • **C-to-E = Centerline-to-End insulation length** • **OD = Outside diameter of insulation**

• *Dimensional references shown are for Dragon Jacket Insulation assemblies designed to fit representative grooved piping components. Component names are used for geometric reference only.* • *Straight pipe insulation assemblies are supplied in standard 36 in nominal lengths unless otherwise specified.* • *Dimensions subject to normal manufacturing tolerances. Contact Dragon Jacket Insulation for critical clearance applications.*

Victaulic® is a registered trademark of Victaulic Company. Product names are used for reference only.

VICTAULIC® NO. 726 BALL VALVE
INSULATION DIMENSIONAL REFERENCE

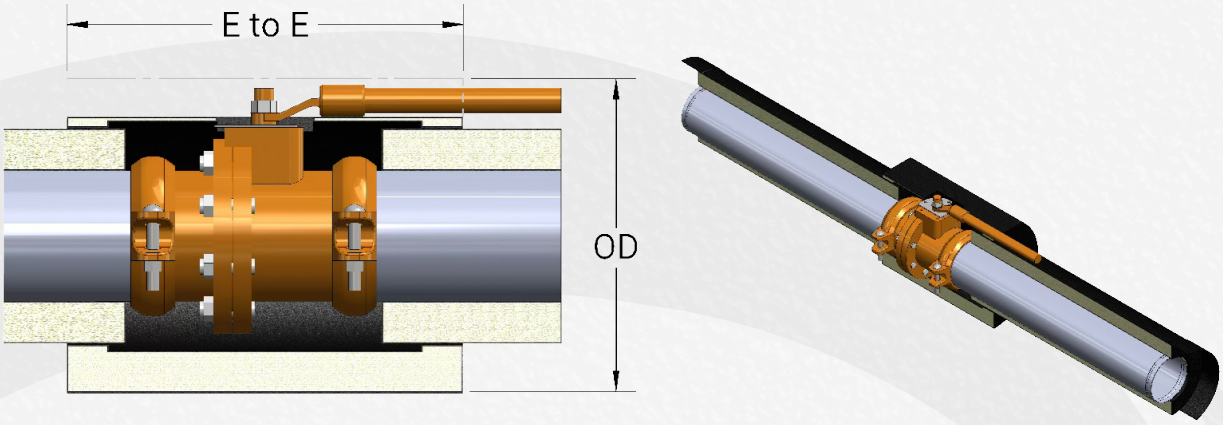

Material colors modified and exaggerated for clarity

Victaulic® No. 726 Ball Valve - Insulation Dimensional Reference

			1 Inch Wall		2 Inch Wall		3 Inch Wall	
Nominal (in)	DN (mm)	Coupling OD (in)	Insulation OD (in)	E to E (in)	Insulation OD (in)	E to E (in)	Insulation OD (in)	E to E (in)
2	50	6.25	8.5	9.5	10.5	11.5	12.5	13.5
2.5		6.81	9.125	10.5	11.125	12.5	13.125	14.5
3	80	7.56	9.875	10.75	11.875	12.75	13.875	14.75
4	100	8.81	11.125	12.5	13.125	14.5	15.125	16.5
6	150	11.38	13.75	14.25	15.75	16.25	17.75	18.25

• **E-to-E = End-to-End insulation length** • **C-to-E = Centerline-to-End insulation length** • **OD = Outside diameter of insulation**

• *Dimensional references shown are for Dragon Jacket Insulation assemblies designed to fit representative grooved piping components. Component names are used for geometric reference only.* • *Straight pipe insulation assemblies are supplied in standard 36 in nominal lengths unless otherwise specified.* • *Dimensions subject to normal manufacturing tolerances. Contact Dragon Jacket Insulation for critical clearance applications.*

Victaulic® is a registered trademark of Victaulic Company. Product names are used for reference only.

VICTAULIC® NO. 716 CHECK VALVE
INSULATION DIMENSIONAL REFERENCE

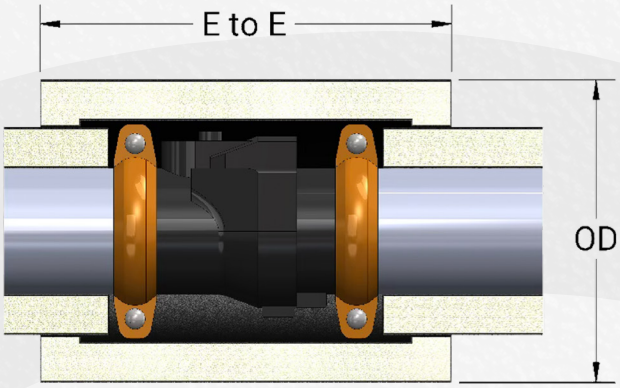

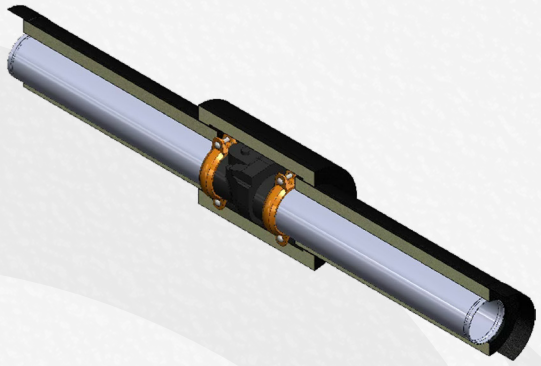

Material colors modified and exaggerated for clarity

Victaulic® No. 716 Check Valve - Insulation Dimensional Reference

			1 Inch Wall		2 Inch Wall		3 Inch Wall	
Nominal (in)	DN (mm)	Coupling OD (in)	Insulation OD (in)	E to E (in)	Insulation OD (in)	E to E (in)	Insulation OD (in)	E to E (in)
2.5		6.81	9.125	8	11.125	10	13.125	12
3	80	7.56	9.875	8.25	11.875	10.25	13.875	12.25
4	100	8.81	11.125	13.75	13.125	15.75	15.125	17.75
6	150	11.38	13.75	15.5	15.75	17.5	17.75	19.5
8	200	14.38	16.75	18	18.75	20	20.75	22
10	250	17.25	19.5	21	21.5	23	23.5	25
12	300	19.25	21.5	23.5	23.5	25.5	25.5	27.5

• E-to-E = End-to-End insulation length • C-to-E = Centerline-to-End insulation length • OD = Outside diameter of insulation

• Dimensional references shown are for Dragon Jacket Insulation assemblies designed to fit representative grooved piping components. Component names are used for geometric reference only. • Straight pipe insulation assemblies are supplied in standard 36 in nominal lengths unless otherwise specified. • Dimensions subject to normal manufacturing tolerances. Contact Dragon Jacket Insulation for critical clearance applications.

Victaulic® is a registered trademark of Victaulic Company. Product names are used for reference only.


DRAGON JACKET
INSULATION
PATENTED